PULSAFEEDER®

The Chem-Tech Series XPV pump combines the best in variable speed peristaltic pump technology with state of the art control electronics, providing unparalleled performance, control, and value. The Series XPV represents the leading edge of microprocessor performance management that allows a variety of choices of input signal types, and onboard timer programs to customize this pump to any application. Of course, this pump is as rugged and reliable as its fixed speed siblings, the XPF and the XPA.

Features

- Variable Speed Motor.
- Fully Scalable 4-20mA Input.
- Hall Effect Input.
- Contacting Head Water Meter Input.
- Flow Totalization. Accurately reports the volume pumped at the touch of a button.
- Cycle Timer. Run automatically at set intervals.
- Daily Timer. Inject chemical based on days of the week.
- LCD Display. Simple, intuitive program selections and clearly displays operating parameters.
- Duplex Head Models. Two pump heads to deliver twice the flow, or the rated flow of two different chemicals simultaneously.
- Tubing Materials. Standard Norprene tube material in Low Pressure ratings - extended tube life, High Pressure ratings - meet demanding system requirements. Fluran tubing - greater chemical resistance: contact Technical Service for compatibility.

Controls

Flow Totalization

Variable Speed

Three Inputs

- 4-20mA Fully Scalable
- Hall Effect
- Contacting Head Water Meter

Two Timers

- Cycle Timer
- Daily Timer

Operating Benefits

- Reliable metering performance.
- Mixed fluid capable. Inherently degassing.
- Extended tube life.
- Rugged, sealed gear train.
- Easy tube change-out.
- Self priming.
- Chemical resistant materials.
- Simple installation.

Aftermarket

- KOPkits
- Gauges
- Dampeners
- Pressure Relief Valves
- Tanks
- Pre-Engineered Systems
- Process Controllers (MicroVision)

Tested and Certified by WQA against NSF/ANSI 61-Section 8. and CSA B483.1

CHEM·TECH **Series XPV**

Peristaltic Metering Pumps

CHEM·TECH Series XPV

Specifications and Model Selection

MODELS:	Flow	Pressure Rating - PSI (Bar)				Tube Size	Motor Speed (RPM)
		Single Head Options			Duplex		
		'H' Tube	'L' Tube	'F' Tube	'L' Tube		
XP008	8 GPD (1.3 LPH)	125 (8.6)	80 (5.5)	60 (4.1)	80 (5.5)	2	65 Max.
XP017	17 GPD (2.7 LPH)	110 (7.6)	70 (4.8)	50 (3.4) [1]	70 (4.8)	3	
XP033	33 GPD (5.2 LPH)	100 (5.9)	50 (3.4)	40 (2.8) [2]	50 (3.4)	4	
XP055	55 GPD (8.7 LPH)	80 (5.5)	40 (2.8)		40 (2.8)	6	60 Max.
XP100	100 GPD (15.8 LPH)		25 (1.7)		25 (1.7)	8	

[1] Max flow rate is 15 GPD (2.4 LPH) with Fluran tube.
[2] Max flow rate is 28 GPD (4.4 LPH) with Fluran tube.

Engineering Data

Drive:	Variable Input Duplex Head
Tubing:	
Norprene Low Pressure	1/4" or 3/8" Tube Fittings
Norprene High Pressure	1/4" or 3/8" Tube Fittings
Fluran	1/4" or 3/8" Tube Fittings
Viscosity Max CPS:	300 CPS
Turn-Down Ratio:	100:1
Enclosure:	NEMA 3R / IP31 (In Horizontal Position)
Power Input:	115 VAC/60 HZ, 230 VAC/50/60 HZ
Temperature Limitations:	104ºF / 40ºC max.
Shipping Weight:	8 lbs. / 3.63kg.

Specifications subject to change without notice.

Integrated Tank Systems

Integrated Tank Systems

Pulsafeeder's ITS System is a completely integrated tank system constructed of high density UV resistant polyethylene (PE) with a 15 gallon capacity. This tank system is translucent with 5 gallon increments and the tank's low level indicator allows visual monitoring of chemicals without opening the tank. The tight fitting child proof lid keeps the chemical free of contaminants and protects the surrounding area from chemical fumes.
The ITS System also allows for easy access to the liquid end and control panel of the mounted pump.
A system consists of a chemical tank with lid and bulkhead fittings, a liquid level indicator float assembly and feeder mounting hardware.

Get a free quote today:
Commercial Industrial Supply
1444 East Main Street
Rock Hill, SC 29730 USA
Tel: (866) 777-8001
Email: info@emailcis.com

Dimensions **All dimensions expressed as inches (mm)**

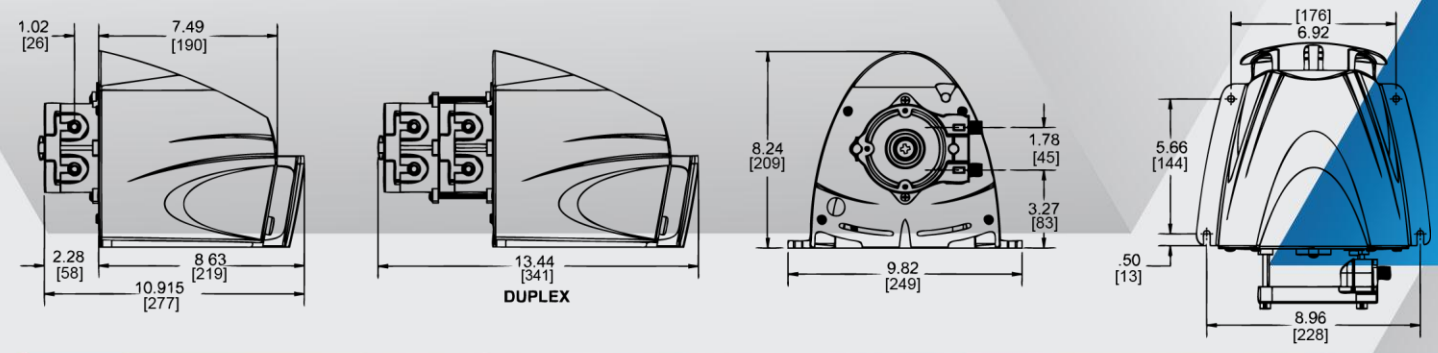

PULSAFEEDER
27101 Airport Road
Punta Gorda, FL 33982
Phone: ++1(941) 575-3800
Fax: ++1(941) 575-4085

www.pulsatron.com

An ISO 9001 Certified Company

CTI010 B15

IDEX FLUID & METERING