MAHLE

Industry

Cartridge Filter Housings
Nowata 1L Series

Filters for Liquid and Gas Applications
Waterflood Operations, Pollution Control, Glycol and Amine Filtration

1. Introduction

The 1L series cartridge filter housings are available in 1, 2, 3 or 4 cartridge length models at a 200 psi working pressure. These low cost, high quality filters are designed for industrial and commercial service and are ideal for many low pressure glycol and amine applications. The head mounts directly in the flow line. The filter may be mounted in any position. Fluid enters one side of the filter head and is channeled to the area around the filter cartridge. The fluid or gas passes through the cartridge into the center and out the other side of the head. The single piece body is sealed to the head by a fixed rigid center rod and T-handle closure nut. As the T-handle is tightened, the body and cartridge are firmly sealed against the head and gasket. The T-handle, standard on the 1L series, is an option on many other brands. Each model has, as standard, a plugged 1/8” internal pipe thread drain in the bottom of the body.

Features

- Available in 1, 2, 3 or 4 cartridge models
- 200 psi working pressure
- Carbon steel or stainless steel construction
- T-Handle closure nut
- Buna shell gasket
- One piece body construction
- 1” Internal pipe thread inlet/outlet connections
- 1/8” Internal pipe thread drain is standard
- Useful for gas or fluid filtration
- Water flow rates to 24 gpm
- Glycol flow rates to 15 gpm

2. Standard Construction for 1L and 1LU Housings

The cast head of the 1L series cartridge filter housing has 1 inch, in-line, internal pipe thread inlet and outlet connections. The tubular body and welded end closure are made of either carbon or stainless steel. All wetted parts of the 1L series are cast/carbon and the 1LU series are stainless steel. The Buna shell gasket is held in place by a machined groove in the head which seals between a T-handle nut and head. The head and body are pulled together by the T-handle nut threaded to a rigid, fixed center rod which is an integral part of the body. As the T-handle is turned, the body is sealed firmly to the head. The T-handle closure feature eliminates the need for wrenches or tools. The cartridge is sealed in place as the T-handle is tightened. The 1C model holds one 9-3/4 inch long cartridge. The 2C model uses either two stacked single length 9-3/4 inch cartridges or one single 19-1/2 inch length cartridge. The 3C model holds one 29-1/4 inch long cartridge or three single length 9-3/4 inch cartridges. The 4C model holds one 40 inch long cartridge. A knife edged stand welded to the body center rod creates both a positive cartridge seal and a contaminant sump area. All housings include one set of filter cartridges installed. All models are available for 200 psi working pressure at a maximum temperature of 250 °F.

3. Special Features of the 1L Series Cartridge Housings

The Following Features Offer Special Benefits at No Extra Cost:

- Initial set of 25 micron NP series cartridges included.
- 1” FNPT inlet and outlet connections allow maximum flow ratings at a low pressure drop.
- Standard T-handle eliminates the need for wrenches or tools.
- Standard 1/8” FNPT body drain fitting allows for draining or pressure relief.

4. Dimensional Information

Model	Number of Cartridges	Shipping Weight (lbs)	A	B	C	D	E (1)	F (2)
1L1N 1LU1N	1	7	14	12	11	4-1/4	3-1/2	1" FNPT
1L2N 1LU2N	2	10	24	22	21	4-1/4	3-1/2	1" FNPT
1L3N 1LU3N	3	13	34	32	31	4-1/4	3-1/2	1" FNPT
1L4N 1LU4N	4	16	44	42	41	4-1/4	3-1/2	1" FNPT

Dimensions shown in inches unless otherwise stated. Specifications are for reference only and subject to change without notice.

NOTES:

(1) Body Diameter.

(2) Internal pipe thread inlet and outlet connection size.

(*3) 1/8 Inch FNPT drain.

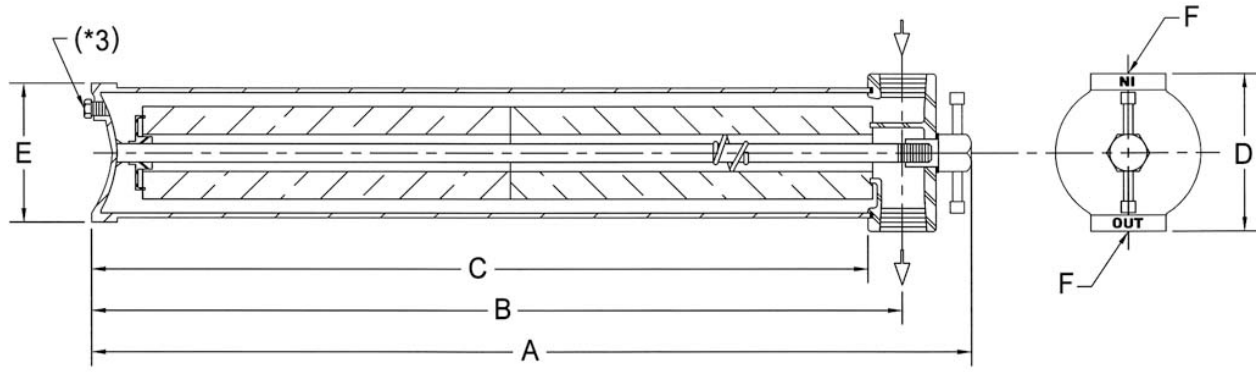

Get a free price quote:

Commercial Industrial Supply

1444 E. Main St., Rock Hill, SC 29730 USA

Tel: (866) 777-8001 Email: info@emailcis.com